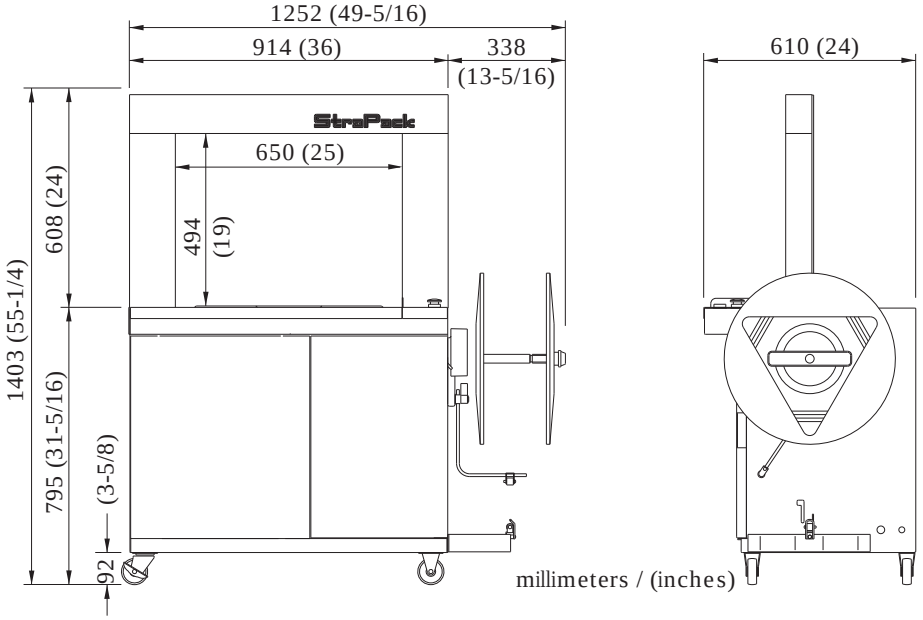
1252 (49-5/16)
914 (36)
338
(13-5/16)
610 (24)
StraPack
650 (25)
494
(19)
608 (24)
1403 (55-1/4)
795 (31-5/16)
(3-5/8)
92
millimeters / (inches)